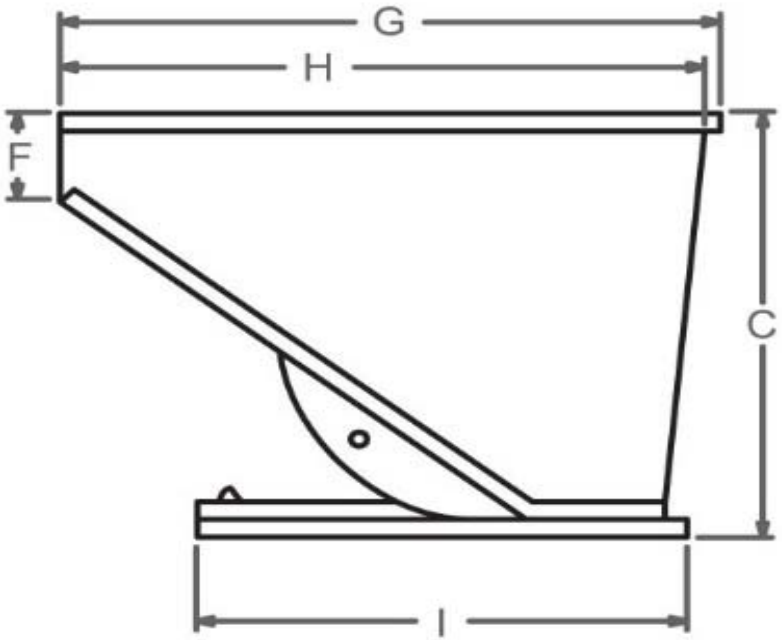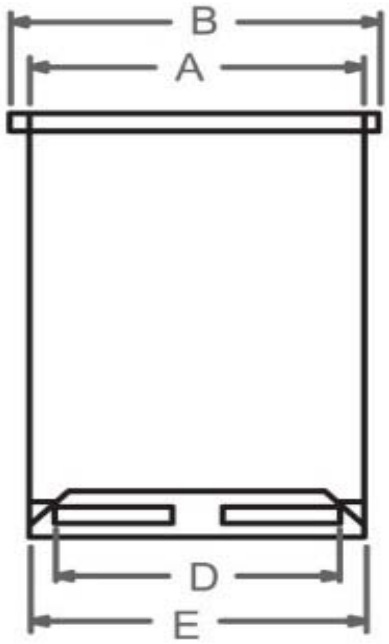Model	Volume Capacity	Weight Capacity	Ship Weight	A	B	C	D	E	G	H	I
HDSD50	1/2 YD	4000#	400	35"	39"	27 3/8"	30"	35 1/2"	51 3/8"	49 3/8"	44"
HDSD75	3/4 YD	5000#	580	35"	39"	35 5/8"	30"	35 1/2"	61"	59"	47"
HDSD100	1 YD	6000#	600	35"	39"	40 1/4"	30"	35 1/2"	69 1/4"	67 1/4"	51"
HDSD150	1 1/2 YD	6000#	700	54"	58"	40 1/4"	49 1/2"	54"	69 1/4"	67 1/4"	51"
HDSD200	2 YD	6000#	800	54"	58"	46 1/2"	49 1/2"	54"	69 3/8"	67 5/8"	57"
HDSD300	3 YD	5000#	1000	60"	64"	53 1/2"	53 1/2"	60"	75 7/8"	74 3/16"	63"
HDSD400	4 YD	4000#	1275	80"	84"	53 1/4"	53 1/2"	60"	75 7/8"	74 3/16"	63"
HDSD500	5 YD	4000#	1475	100"	104"	54 1/4"	53 1/2"	60"	75 7/8"	74 3/16"	63"